Hogeschool van Arnhem en Nijmegen
HAN University

Graphity

IS-ontwikkeltools

NIOC 2013

Eddy Luursema, Arnoud van Bers, Misja Nabben

Research Group Model Based Information Systems

Hogeschool van Arnhem en Nijmegen
HAN University

Presentation

- Introduction M-BIS
- FCO-IM history
- Meta & meta - meta
- Graphical representation
- Requirements of graphical meta-meta tool
- FCO – IMAGine tool using Graphity
- Integrated tool
- Future developments

Hogeschool van Arnhem en Nijmegen
HAN University

Introduction MBIS

- HAN University of Applied Sciences
- Information & Communication Academy
- Lecturers bachelor & master:
  - Information modeling
  - Databases
  - Web technology
- Research group: Model Based Information Systems
  - Education: ER/FCO-IM, Business Intelligence (DV, Anchor)
  - Tools: modeling & application generation
  - Projects: faculty information systems

FCO-IM history

- NIAM = Nijssen Information Analysis Method
  - Sjir Nijssen, Eckart Falkenberg, Robert Meersman & others, 1975 until 1989
  - www.pnagroup.nl
- ORM = Object Role Modeling
  - Terry Halpin, 1989 – now
  - www.orm.net
- FCO-IM = Fully Communication Oriented Information Modeling
  - Guido Bakema, Jan Pieter Zwart, Harm Van der Lek, 1991-now
  - www.fco-im.nl
- SBVR = Sementics of Business Vocabulary And Business Rules,
  - OMG, 2008 - now
  - http://www.omg.org/spec/SBVR/1.0/

Hogeschool van Arnhem en Nijmegen
HAN University

FCO-IM basics

FLOOR	#EXITS	ROOM	#SEATS	EQUIPMENT
1	2	1.1	20	BB BM
.	.	1.2	30	-
2	0	2.1	20	BB
3	2	3.2a	-	-
BB blackboard, BM beamer, PC personal computer				

- Example document with concrete example data

Verbalization

"Floor 1 exists."

"Floor 1 has 2 emergency exits."

"Room 1.1 has 20 seats."

"Room 1.1 is equipped with PC."

- Elementary fact expressions

FCO-IM IGD

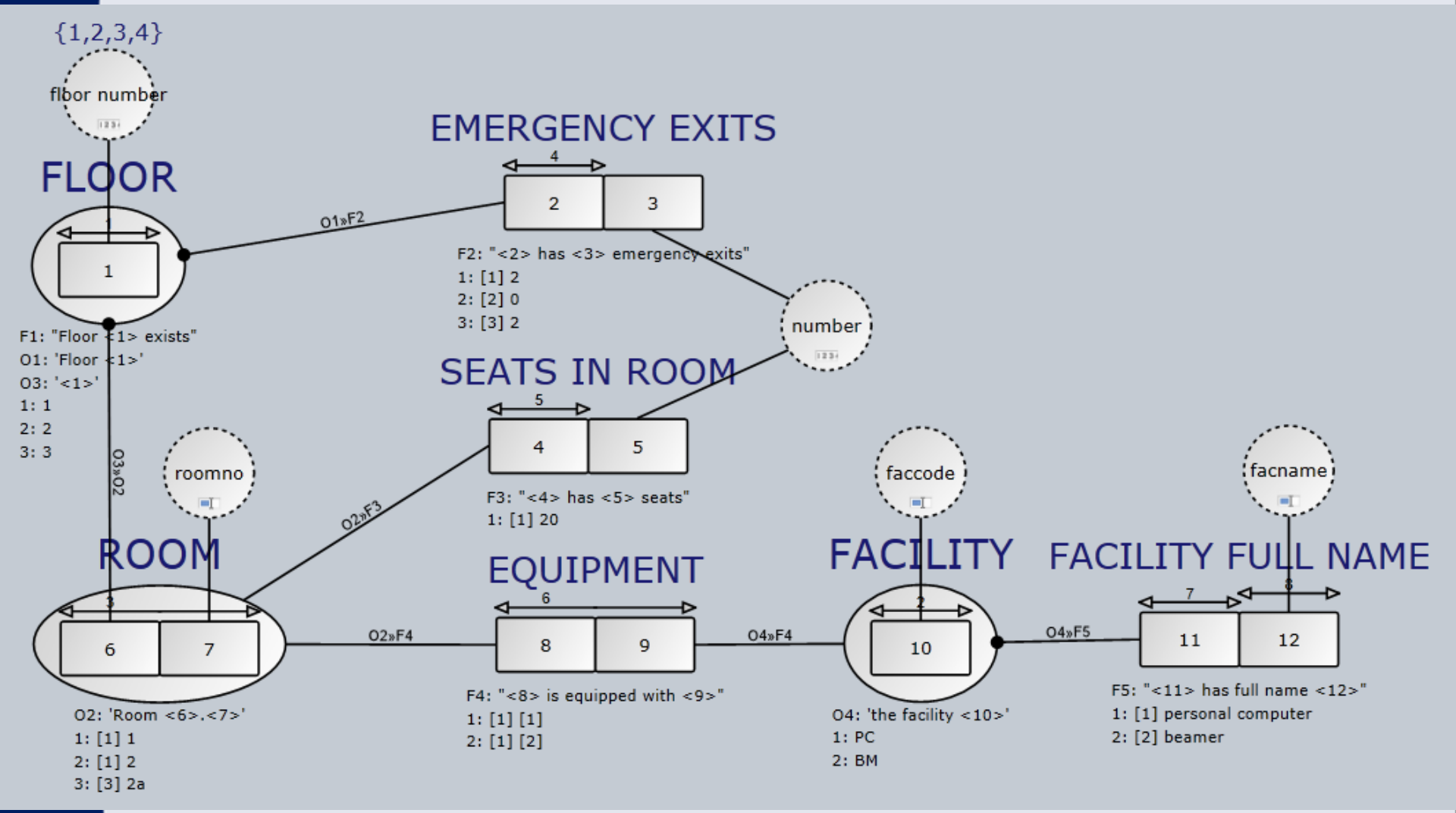
{1,2,3,4}
floor number
FLOOR
1
F1: "Floor <1> exists"
O1: 'Floor <1>'
O3: '<1>'
1: 1
2: 2
3: 3
O1»F2
EMERGENCY EXITS
4
2
3
F2: "<2> has <3> emergency exits"
1: [1] 2
2: [2] 0
3: [3] 2
number
SEATS IN ROOM
5
4
5
F3: "<4> has <5> seats"
1: [1] 20
O3»O2
roomno
O2»F3
ROOM
3
6
7
O2: 'Room <6>,<7>'
1: [1] 1
2: [1] 2
3: [3] 2a
O2»F4
EQUIPMENT
6
8
9
F4: "<8> is equipped with <9>"
1: [1] [1]
2: [1] [2]
O4»F4
faccode
FACILITY
2
10
O4: 'the facility <10>'
1: PC
2: BM
O4»F5
facname
FACILITY FULL NAME
7
8
11
12
F5: "<11> has full name <12>"
1: [1] personal computer
2: [2] beamer

Relational model

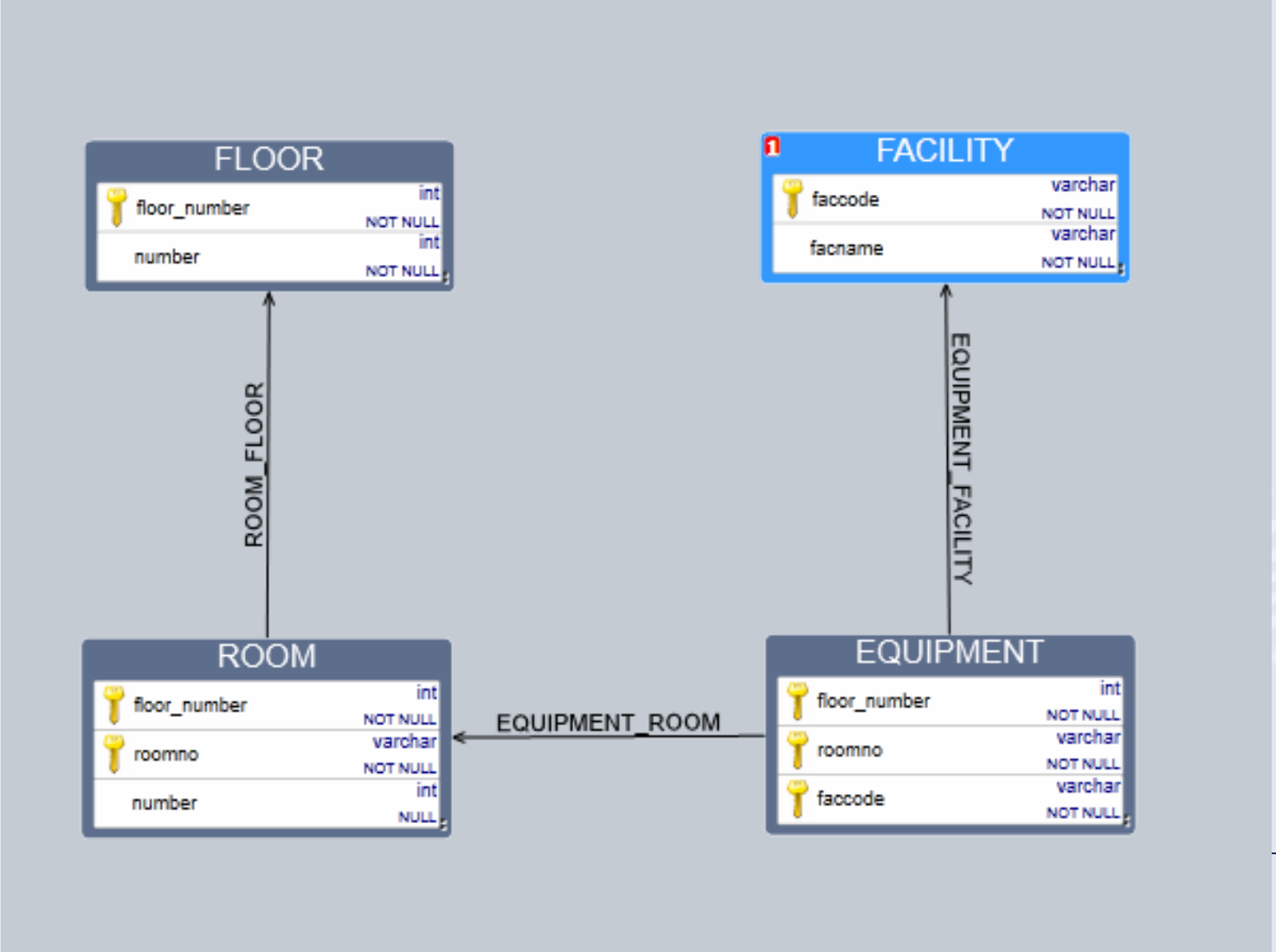

Output: CREATE script

```
CREATE TABLE [FLOOR] (
 [floor_number] varchar(100) NOT NULL,
 [number] varchar(100) NOT NULL,

 CONSTRAINT [PK_1] PRIMARY KEY ([floor_number])
)

CREATE TABLE [ROOM] (
 [floor_number] varchar(100) NOT NULL,
 [roomno] varchar(100) NOT NULL,
 [number] varchar(100) NULL,

 CONSTRAINT [PK_3] PRIMARY KEY ([floor_number],[roomno])
)
```

Generated application

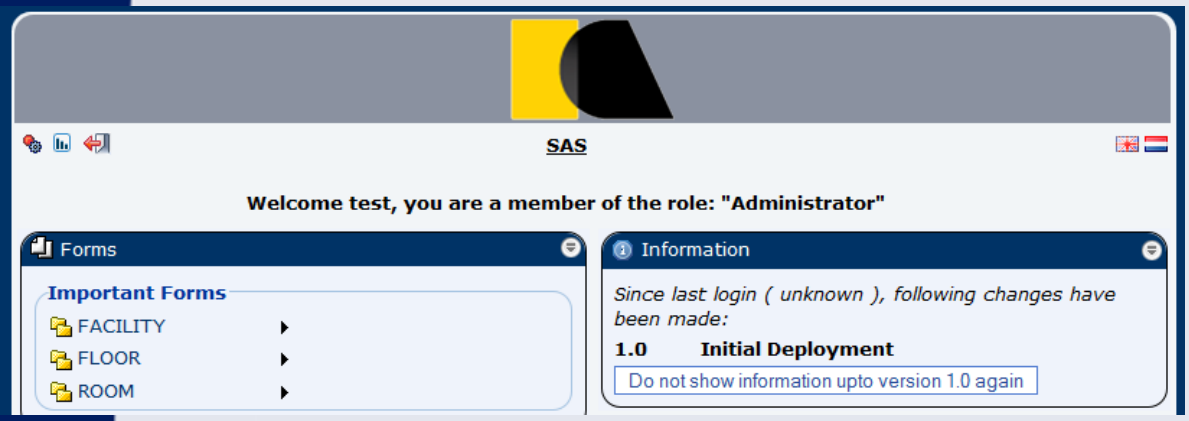

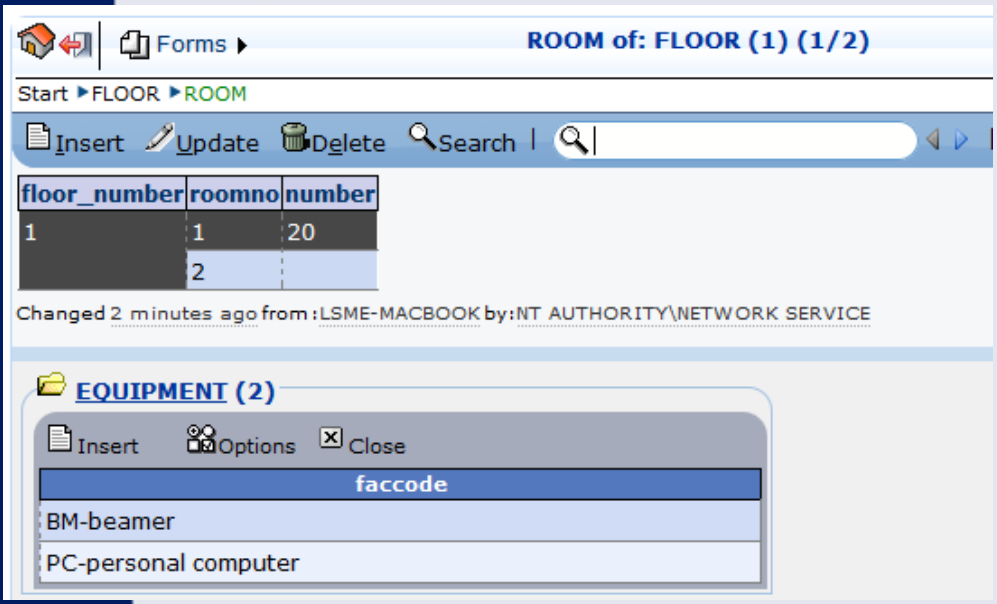

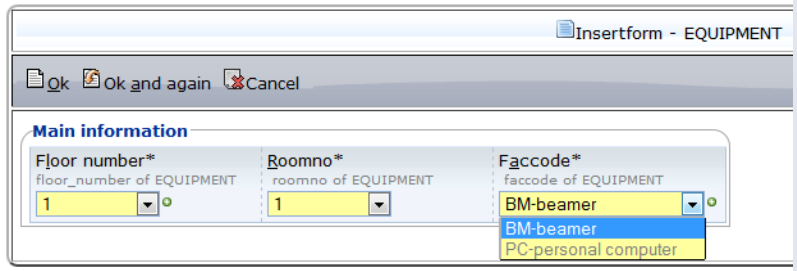

Table or application level

Floor

Floor_number	number
1	2
3	2

Room

Floor_number	Roomno	Number
1	1	20
1	2	NULL
3	2a	NULL

Meta level

Tables

Table_name
Floor
Room

Columns

Table_name	Column_name	Datatype
Floor	Floorumber	int
Floor	Number	int
Room	Floornumber	int
Room	Roomnumber	varchar

Hogeschool van Arnhem en Nijmegen
HAN University

Meta – meta level

Tables

Table_name
Tables
Columns

Columns

Table_name	Column_name	Datatype
Tables	Table_name	varchar
Columns	Table_name	varchar
Columns	Column_name	varchar
Columns	Datatype	varchar

Hogeschool van Arnhem en Nijmegen
HAN University

Overview

Meta – meta automodel

Tables

Table_name
Tables
Columns

Meta

Tables

Table_name
Floor
Room

Table

Floor

Floor_number	number
1	2
3	2

Hogeschool van Arnhem en Nijmegen
HAN University

Future: Integrated (fact based) modeling

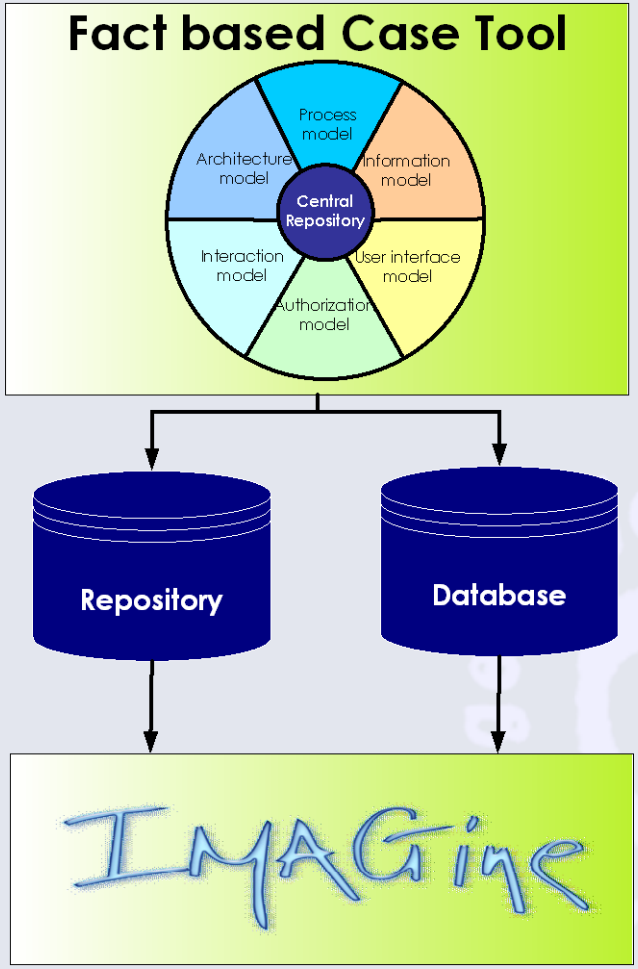

Hogeschool van Arnhem en Nijmegen
HAN University

Graphical representation

- Why?
- Take a look at some examples
- Make an ‘information analysis’ of graphical models

Hogeschool van Arnhem en Nijmegen
HAN University

Tools for information modelling

- Objects
- Relations

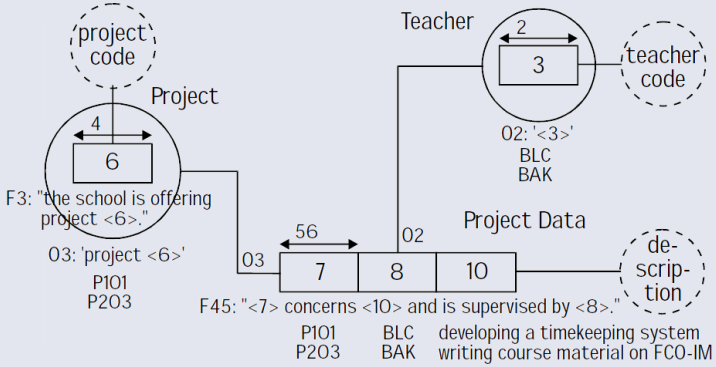

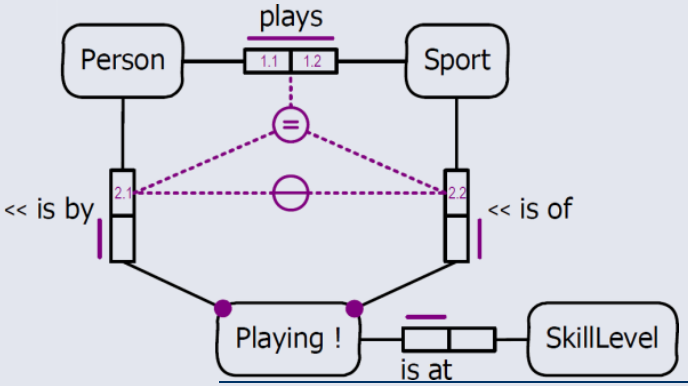

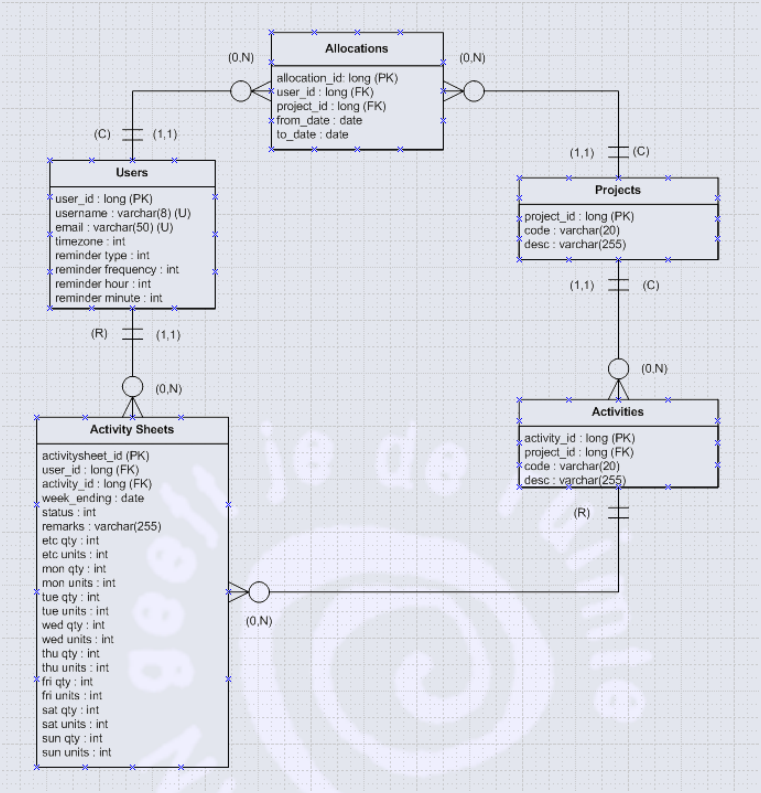

BI tools

- Anchor modeling

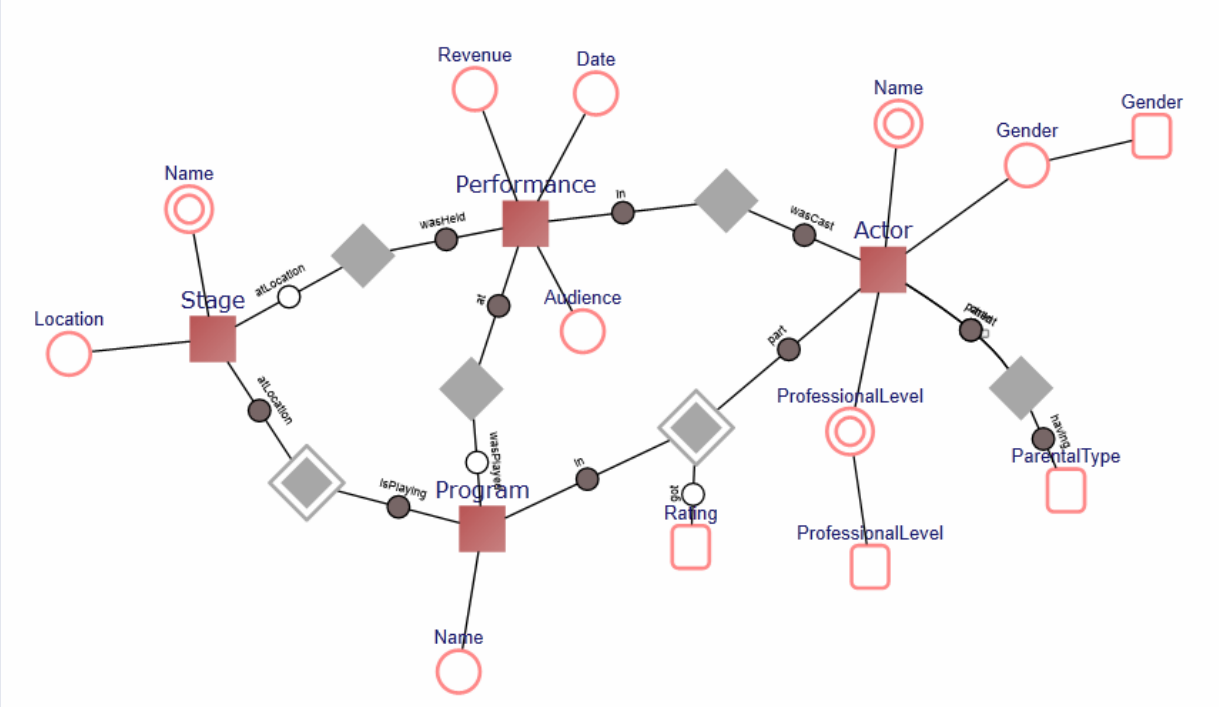

Hogeschool van Arnhem en Nijmegen
HAN University

Process modeling tools

- BPMN

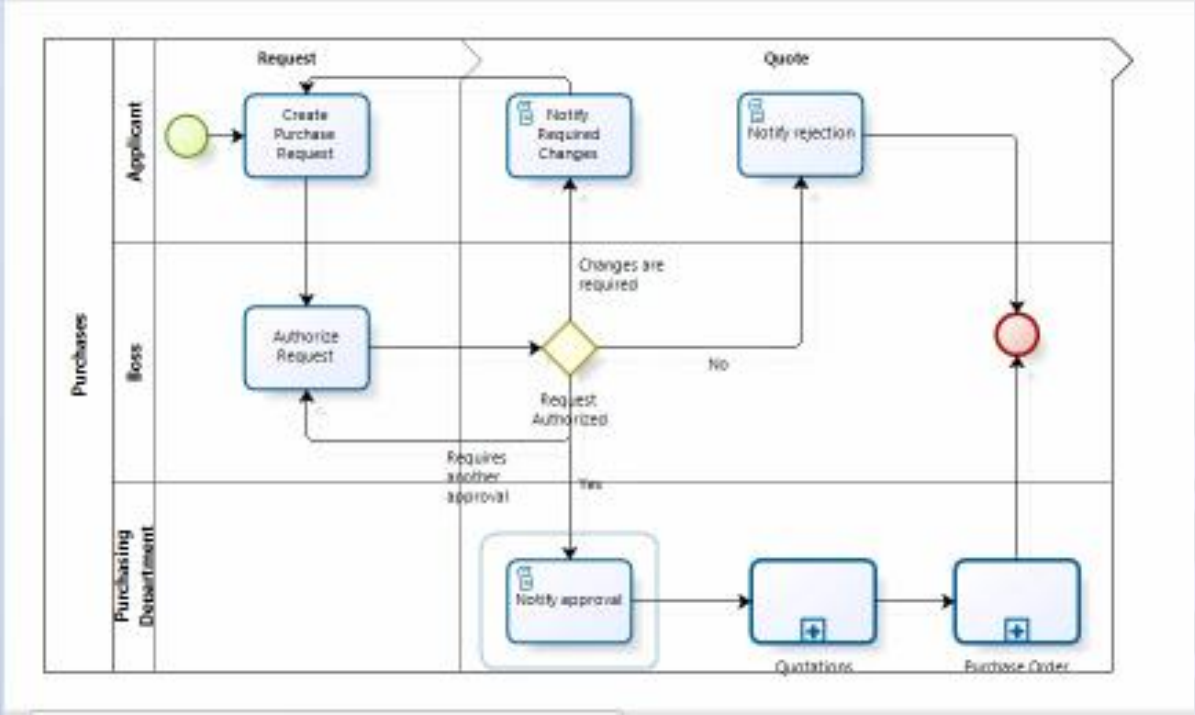

Hogeschool van Arnhem en Nijmegen
HAN University

Requirements of graphical meta-meta tool

- Shapes: (rounded) rectangles, ellipses
- Nested shapes
- Connectors, configurable end points
- Bound text
- ‘Rubber banding’
- Web enabled
- Menu actions
- Repository independent
- **SQL only**, but MSSQLServer 2005 or higher
- No knowledge of C#, Ajax, ASP.NET, Silverlight, Webservices

Graphity

- Silverlight 5 MB
- Graphity = small Silverlight application, 1.5 MB
- Starts within browser
- Communicates through web services with database
- XML as interchange format

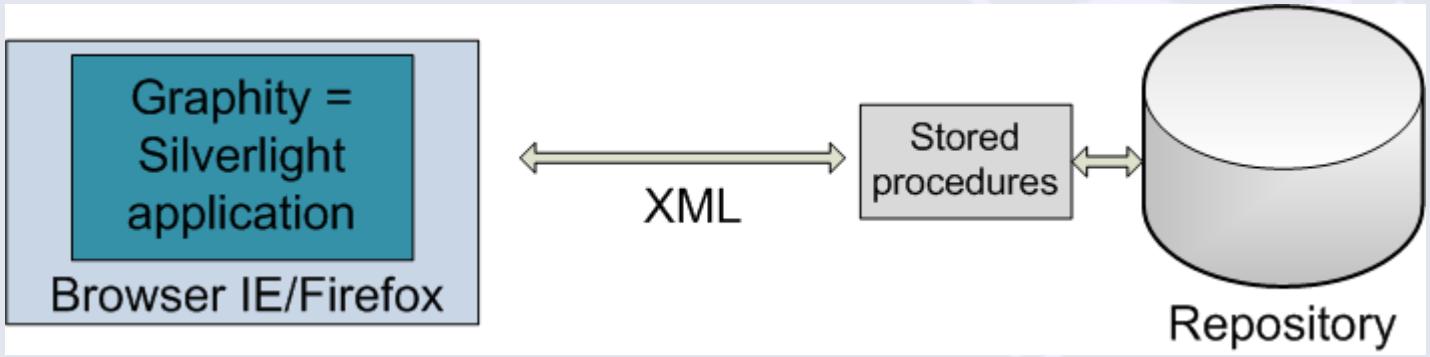

Hogeschool van Arnhem en Nijmegen
HAN University

XML structure

```
<diagram name="diagram1" model="model1" type="type1">
  <shape id="Shape1" innertext="Shape 1" fillcolor="red"/>
  <shape id="Shape2" innertext="Shape 2" type="1" fillcolor="blue"/>
  <shape id="Shape3" innertext="Shape 3" type="2" fillcolor="green"/>
  <connector id="cnx1" from="Shape1" to="Shape2" headtype="1" tailtype="2"/>
  <connector id="cnx2" from="Shape2" to="Shape3" headtype="3" tailtype="4"/>
</diagram>
```

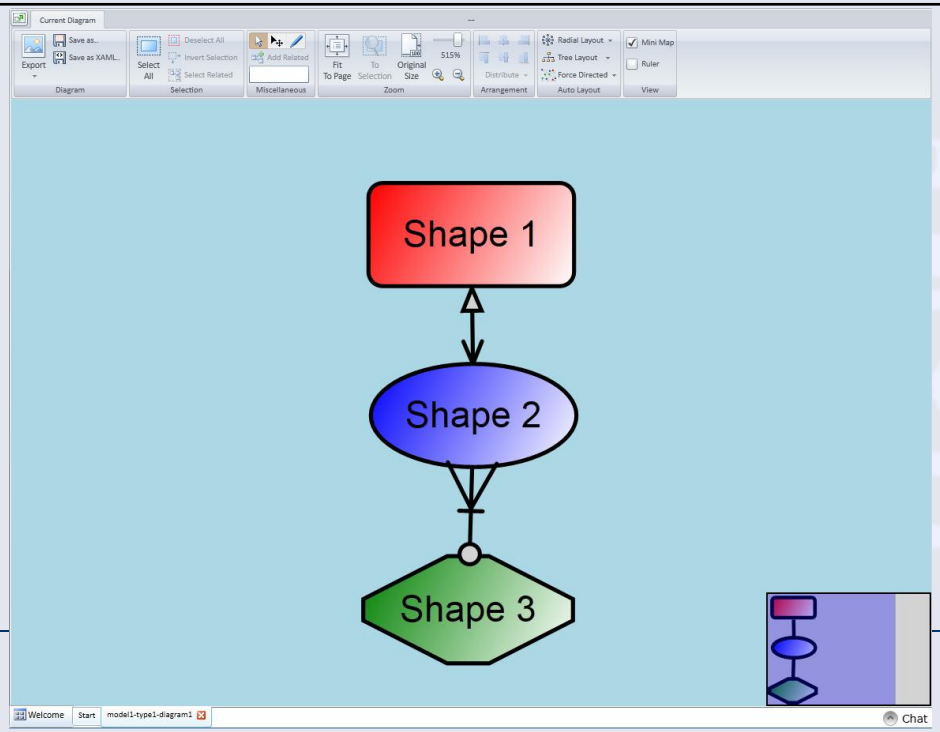

Hogeschool van Arnhem en Nijmegen
HAN University

XML structure 2

```
<diagram name="diagram1" model="model1" type="type1">
  <shape id="Shape1" innertext="Shape 11" >
    <shape id="Child1" innertext="Child 1" >
      <shape id="SubcChild1" innertext="SubChild 1" >
      </shape>
    </shape>
  </shape>
  <shape id="Shape2" innertext="Shape 2"/>
  <connector id="cnx1" from="Shape2" to="SubcChild1" />
</diagram>
```

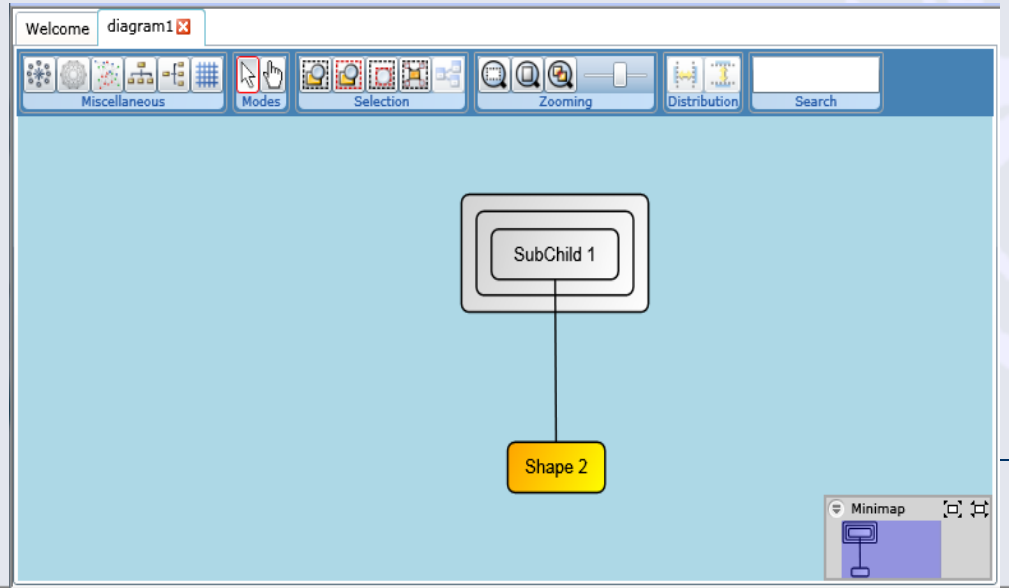

Hogeschool van Arnhem en Nijmegen
HAN University

XML structure 3

```
<diagram name="diagram1" model="model1" type="type1">
  <shape id="Shape1" innertext="Shape 1" arrowdistance="4" h="40" w="40">
    <arrow id="Arrow1" headtype="2" tailtype="2"/>
  </shape>
</diagram>
```

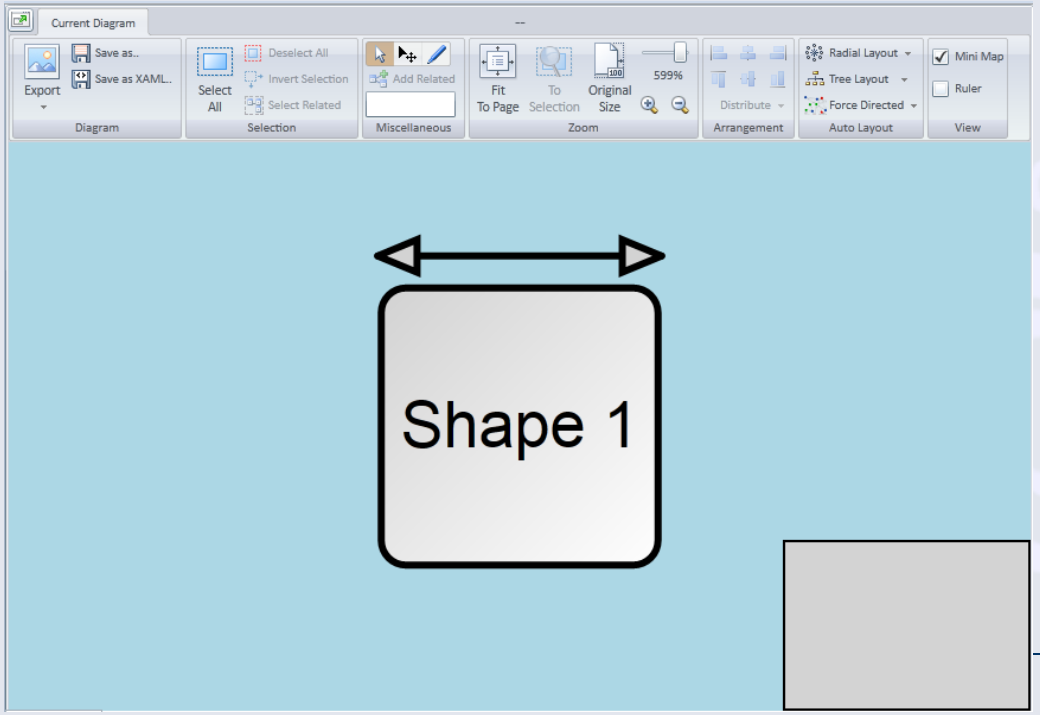

Hogeschool van Arnhem en Nijmegen
HAN University

Shape/connector attributes

- Appearance, size, color, text, dash, positions, endpoints

Upper

Higher

Inner

Lower

Under

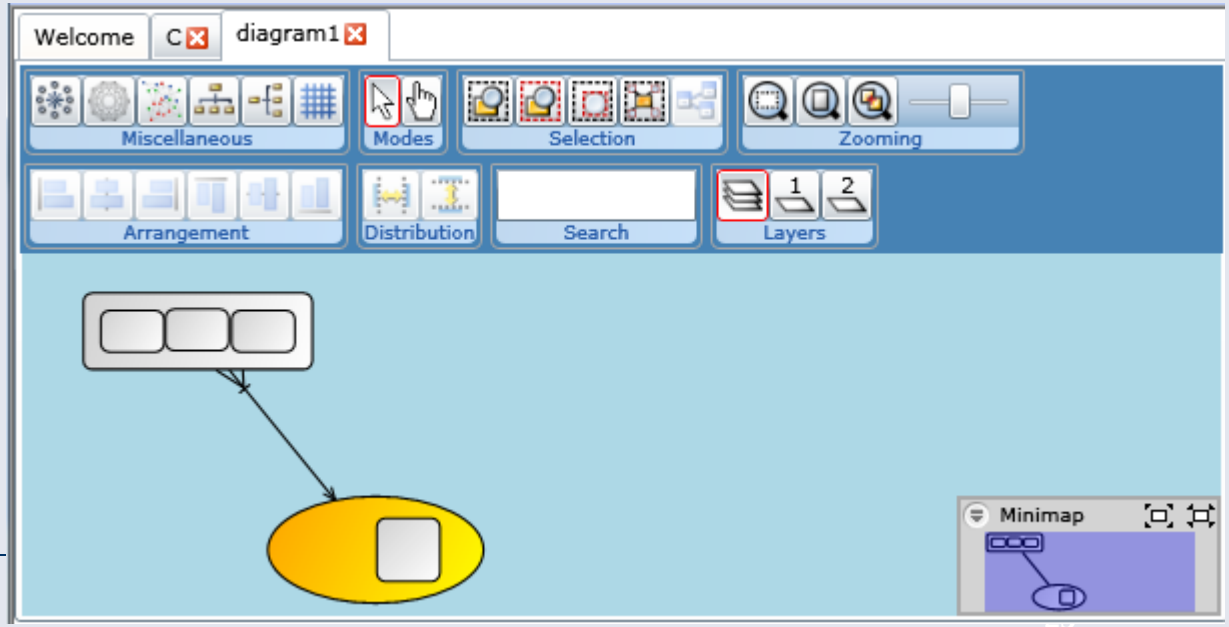

Hogeschool van Arnhem en Nijmegen
HAN University

Graphity: Standard functions

- Mini map
- Zooming
- Selections
- Alignment
- Searching
- Property slider
- Object slider
- Auto layout
- Menu actions

Develop a tool

- Make meta model using e.g. FCO-IM
- Create database
- Create XML queries to show model graphically
- Create menu actions
- Create transformations

Hogeschool van Arnhem en Nijmegen
HAN University

FCO – IM tool using Graphity

- FCO-IM repository
- How to create that?
- Apply FCO-IM on starting document e.g. IGD
- “Role ‘1’ is part of fact type ‘FLOOR’”.
- “Role ‘1’ is played by object type/label type ‘floor number’”.

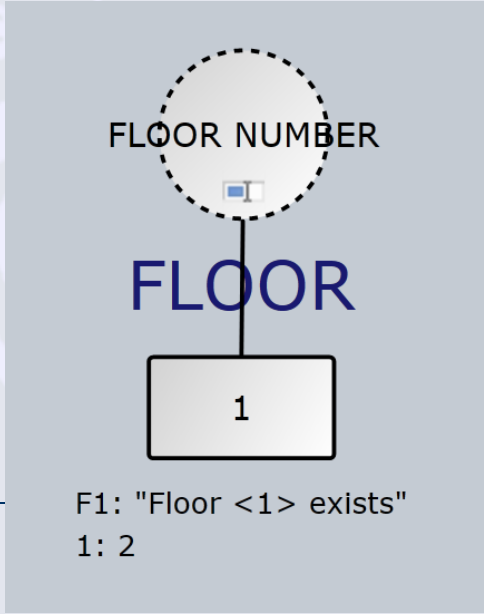

Hogeschool van Arnhem en Nijmegen
HAN University

Small automodel

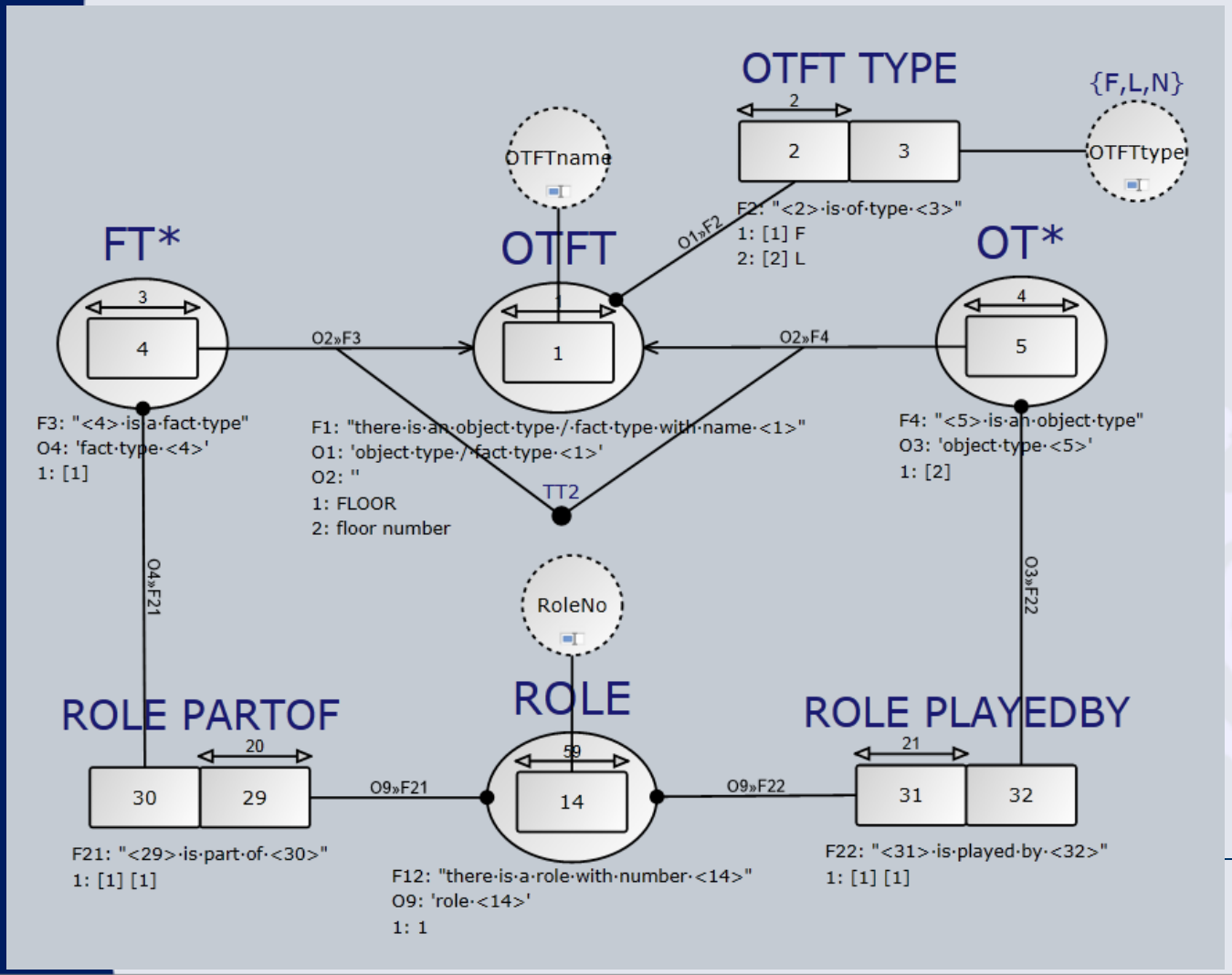

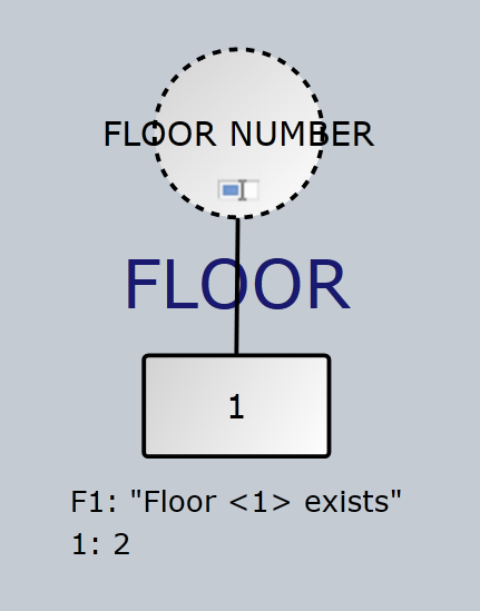

Hogeschool van Arnhem en Nijmegen
HAN University

Automodel FCO-IM

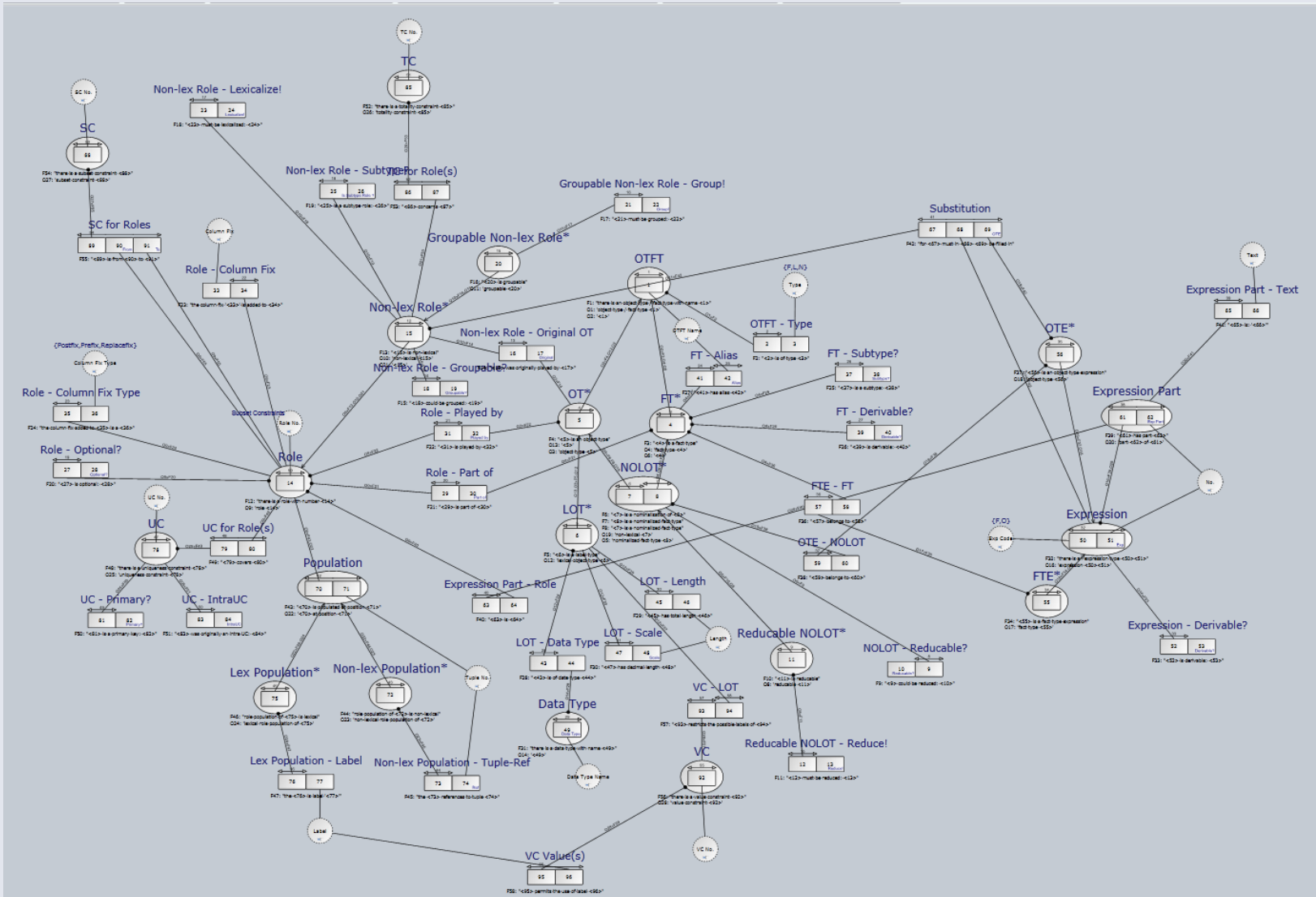

Hogeschool van Arnhem en Nijmegen
HAN University

Example of populated FCO-IM repository

OTFT		
Name	Type	Data type
EMERGENCY EXISTS	F	-
EQUIPMENT	F	-
faccode	L	varchar
FACILITY	N	-
FACILITY FULL NAME	F	-
facname	L	varchar
FLOOR	N	-
floor number	L	varchar
number	L	varchar
ROOM	N	-
roomno	L	varchar
SEATS IN ROOM	F	-

Roles		
Nr	Part of OTFT	Played By OTFT
1	FLOOR	floor number
2	EMERGENCY EXISTS	FLOOR
3	EMERGENCY EXISTS	number
4	SEATS IN ROOM	ROOM
5	SEATS IN ROOM	number
6	ROOM	FLOOR
7	ROOM	roomno
8	EQUIPMENT	ROOM
9	EQUIPMENT	FACILITY
10	FACILITY	faccode
11	FACILITY FULL NAME	FACILITY
12	FACILITY FULL NAME	facname

Expressions		
Type	Code	OTFT
F	1	FLOOR
F	2	EMERGENCY EXISTS
F	3	SEATS IN ROOM
F	4	EQUIPMENT
F	5	FACILITY FULL NAME
O	1	FLOOR
O	2	ROOM
O	3	FLOOR
O	4	FACILITY

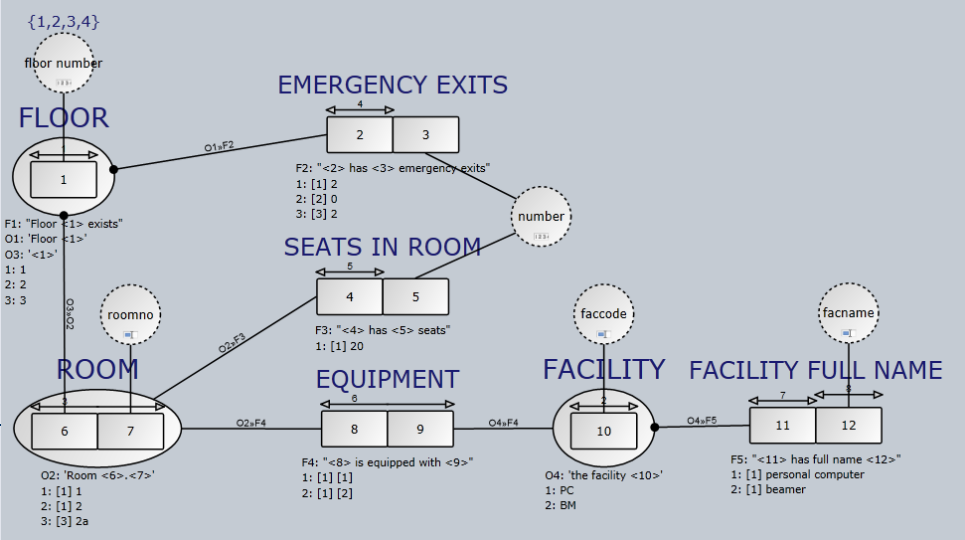

Hogeschool van Arnhem en Nijmegen
HAN University

Example part 2

Expression parts				
Expression	Code	Nr	Role	text
F	1	1	-	Floor
F	1	2	1	-
F	1	3	-	exists
F	2	1	2	-
F	2	2	-	has
F	2	3	3	-
F	2	4	-	emergency exists
F	3	1	4	-
F	3	2	-	has
F	3	3	5	-
F	3	4	-	seats
F	4	1	8	-
F	4	2	-	is equipped with
F	4	3	9	-
F	5	1	11	-
F	5	2	-	has full name
F	5	3	12	-
O	1	1	-	Floor
O	1	2	1	-
O	2	1	-	Room
O	2	2	6	-
O	2	3	-	.
O	2	4	7	-
O	3	1	1	-
O	4	1	-	the facility
O	4	2	10	-

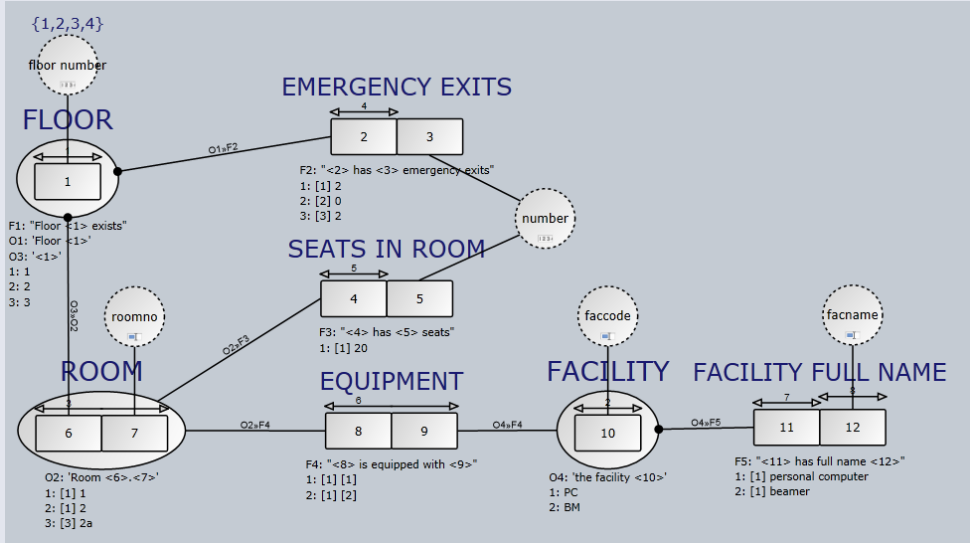

Population			
Role	Tupel	ReferenceTupelNumber	Label
1	1	-	1
1	2	-	2
1	3	-	3
2	1	1	-
2	2	2	-
2	3	3	-
3	1	-	2
3	2	-	0
3	3	-	2

Hogeschool van Arnhem en Nijmegen
HAN University

Example of FCO-IM auto repository

OTFT		
Name	OTFTType	DataType
FT	N	NULL
OT	N	NULL
OTFT	N	NULL
OTFT TYPE	F	NULL
OTFTname	L	varchar
OTFTtype	L	varchar
ROLE	N	NULL
ROLE PARTOF	F	varchar
ROLE PLAYEDBY	F	varchar
RoleNo	L	varchar

Roles		
Number	PartOf	PlayedBy
1	OTFT	OTFTname
2	OTFT TYPE	OTFT
3	OTFT TYPE	OTFTtype
4	FT	OTFT
5	OT	OTFT
14	ROLE	RoleNo
29	ROLE PARTOF	ROLE
30	ROLE PARTOF	FT
31	ROLE PLAYEDBY	ROLE
32	ROLE PLAYEDBY	OT

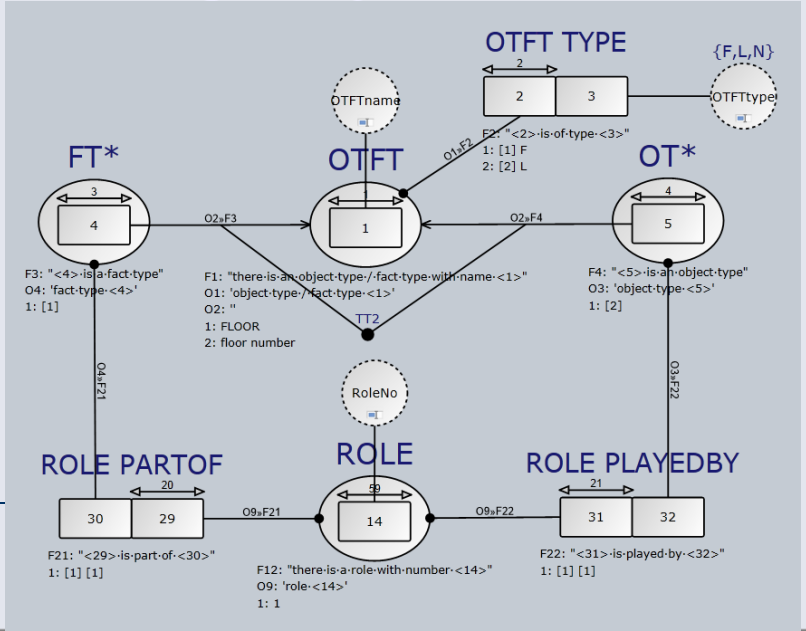

Hogeschool van Arnhem en Nijmegen
HAN University

Transformations of repository

- FCO-IM EL-IGD = XML structure for Graphity
- GLR = repository -> repository transformation
- SQL script = text transformation
- Research: all repository transformations
  - Entity Relationship Modeling
  - UML
  - Data vault
  - Anchor modelig
  - Stars & snowflakes for DWH

Hogeschool van Arnhem en Nijmegen
HAN University

Example of XML generation

```
SELECT
'@id'                    = REPLACE(otf_OTFTName,' ','_'),
'@innertext'             = otf_OTFTName
FROM tblFCO_OTFT
WHERE otf_Modelname = 'Rooms and floors'
AND otf_ModelType = 'EL-IGD'
AND otf_OTFTType IN ('F','N')
FOR XML PATH('shape'), TYPE
```

```
<shape id="AVAILABLE_FACILITIES" innertext="AVAILABLE FACILITIES" />
<shape id="EMERCENCY_EXISTS" innertext="EMERCENCY EXISTS" />
<shape id="EQUIPMENT" innertext="EQUIPMENT" />
<shape id="FACILITY" innertext="FACILITY" />
<shape id="FACILITY_FULL_NAME" innertext="FACILITY FULL NAME" />
<shape id="FLOOR" innertext="FLOOR" />
<shape id="INSTALLED_FACILITIES" innertext="INSTALLED FACILITIES" />
<shape id="ROOM" innertext="ROOM" />
<shape id="SEATS_IN_ROOM" innertext="SEATS IN ROOM" />
```

Hogeschool van Arnhem en Nijmegen
HAN University

Example of SQL generation

```
SELECT 'CREATE TABLE ' + otf_OTFTName + '( )'
FROM tblFCO_OTFT
WHERE otf_Modelname = 'Rooms and floors'
AND otf_ModelType = 'EL-IGD'
AND otf_OTFTType IN ('F','N')
```

CREATE TABLE EMERCENCY EXISTS ( )
CREATE TABLE EQUIPMENT ( )
CREATE TABLE FACILITY ( )
CREATE TABLE FACILITY FULL NAME ( )
CREATE TABLE FLOOR ( )
CREATE TABLE ROOM ( )
CREATE TABLE SEATS IN ROOM ( )

Hogeschool van Arnhem en Nijmegen
HAN University

Integrated tool

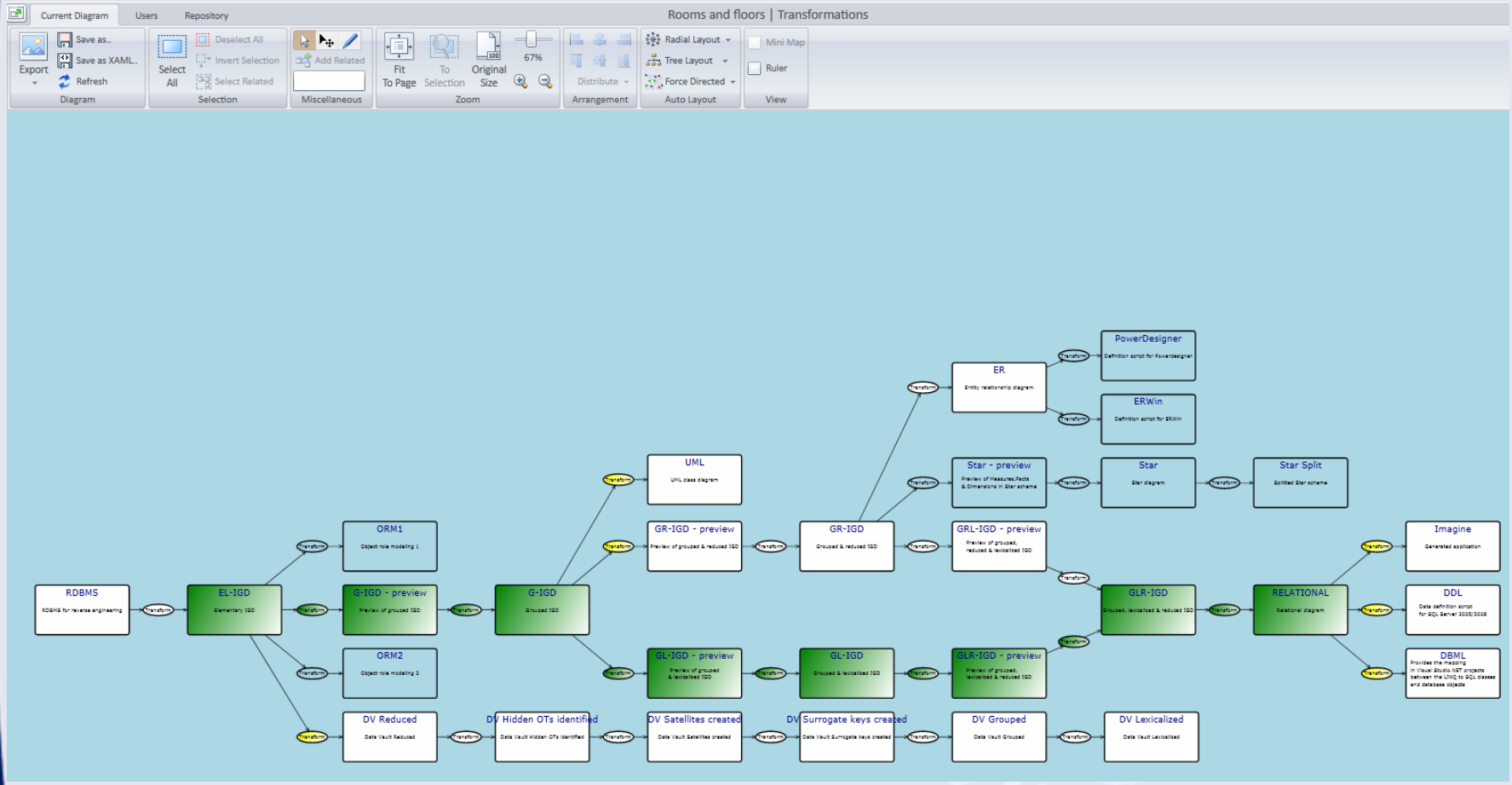

‘Programmed functions’

- Flipping

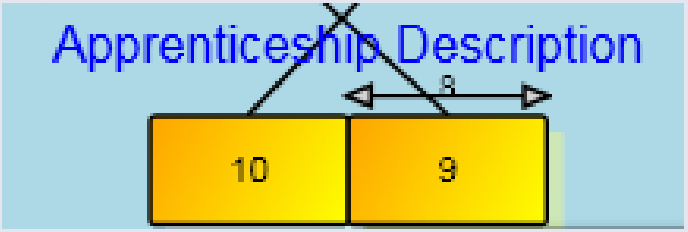

Hogeschool van Arnhem en Nijmegen
HAN University

‘Programmed functions’

- Totality constraints

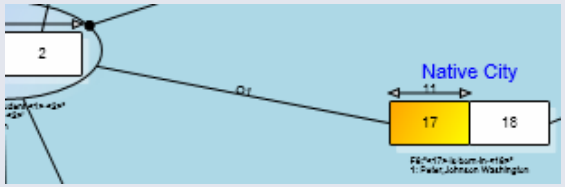

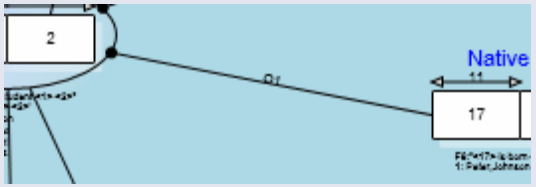

- Unicity constraints

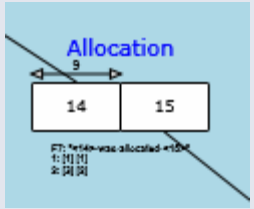

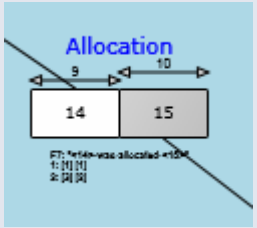

Hogeschool van Arnhem en Nijmegen
HAN University

ER transformation

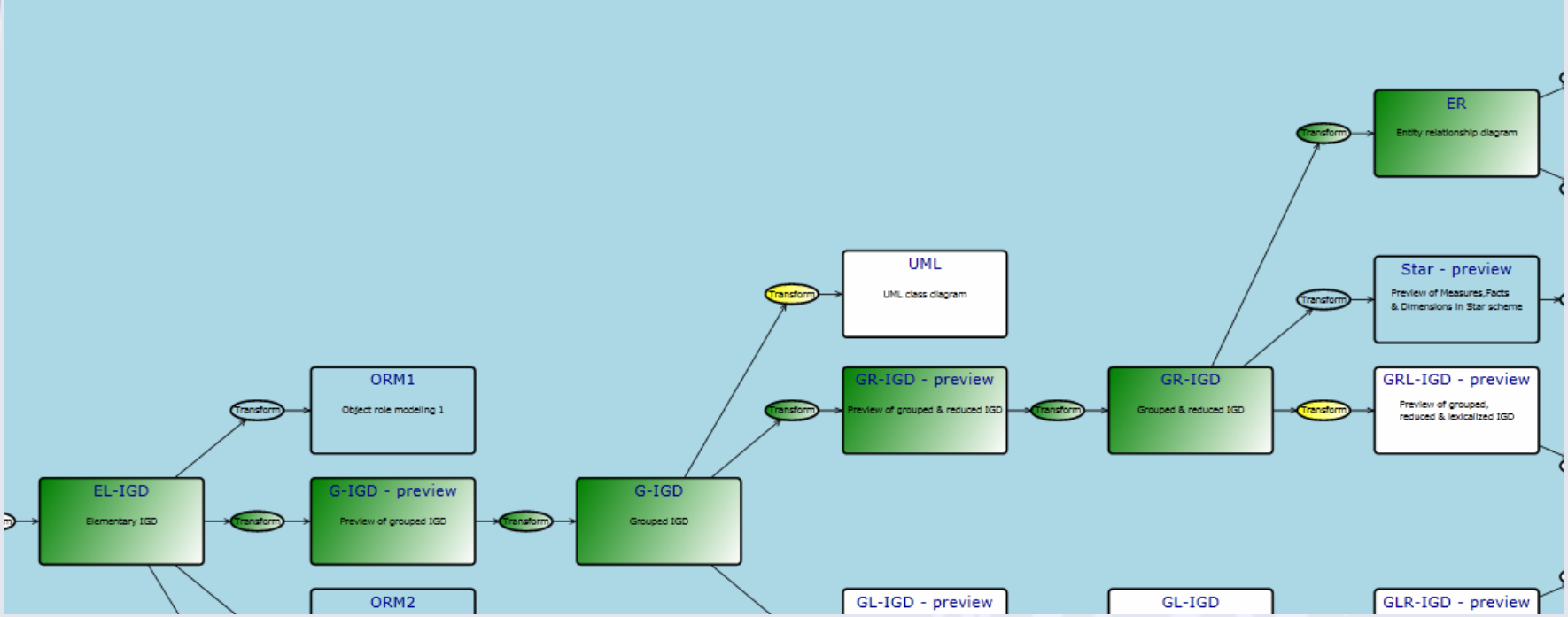

Hogeschool van Arnhem en Nijmegen
HAN University

ER transformation

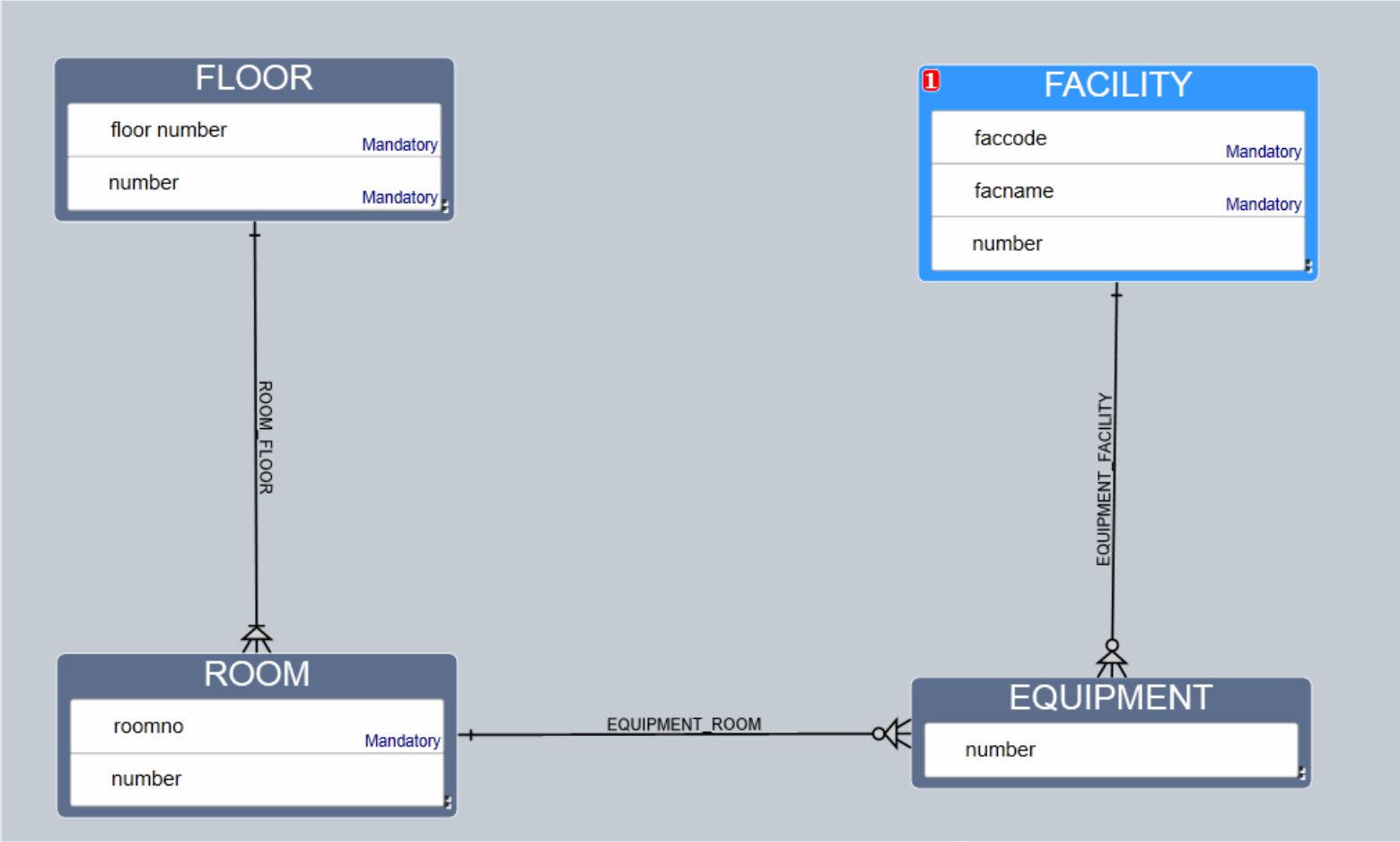

Hogeschool van Arnhem en Nijmegen
HAN University

UML transformation

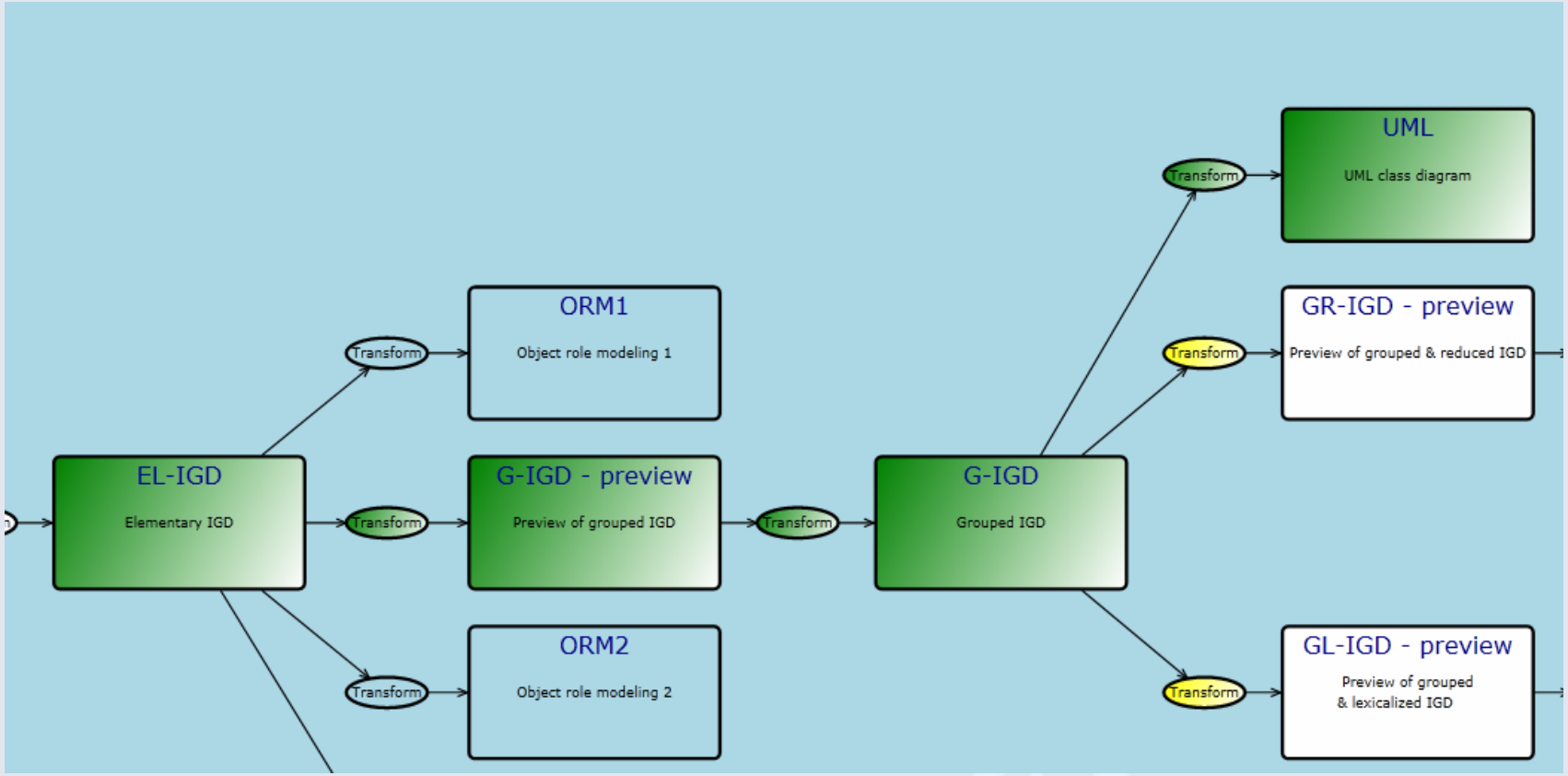

Hogeschool van Arnhem en Nijmegen
HAN University

UML Transformation

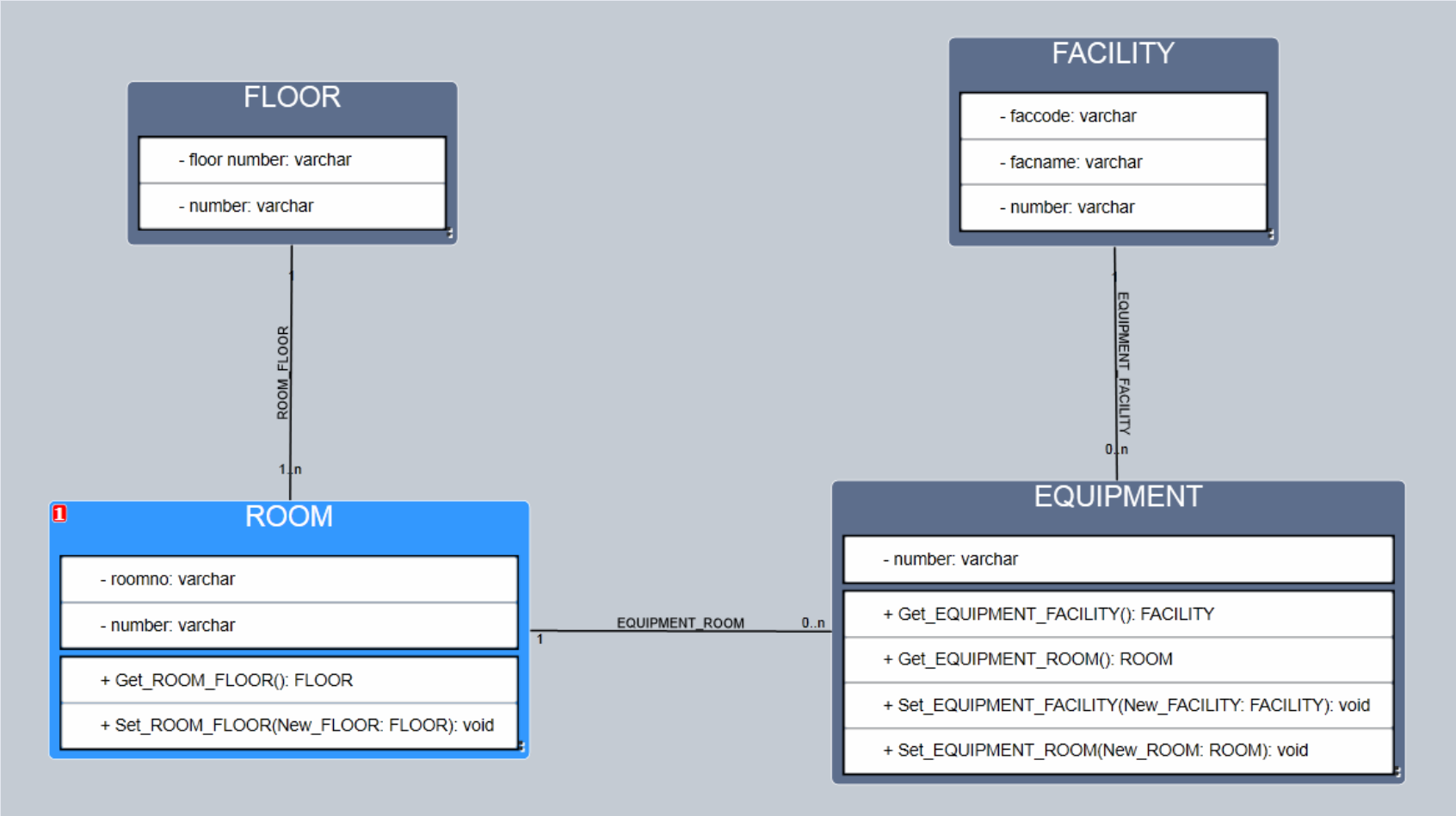

Final projects by students

- BPMN editor/comparison in Graphity (Centric)
- Claqua as interactive conversation (RU)
- Data vault algorithm
- Anchor modeling – 3rd NF comparison speed
- Generating testcases for GLR
- SBVR application generation (Usoft)
- BPMN generation of batch processes (Usoft)
- ORM Anchor modeling transformation

Hogeschool van Arnhem en Nijmegen
HAN University

Future FCO – IM tool

- Remove ‘has …’from diagram
- More constraints, constraint language?
- Generalization
- Recursive identification
- Overlapping fact type expressions
- New input from theoretical research
- Better SQL script (constraints, subtype, triggers)
- Sub types in application
- Better RE with dirty data, missing PK & FK
- ER entry with immediate transformation to FCO-IM
- FCO ER
- More application meta data

Hogeschool van Arnhem en Nijmegen
HAN University

Docenten (Technische) Informatica

- 2 FTE
- U hebt een relevante wo- of hbo-masteropleiding. U bent een ervaren informaticaspecialist met relevante werkervaring, opgedaan in het bedrijfsleven. We zoeken collega's die flexibel inzetbaar zijn voor onderwijs in zowel technische als niet-technische informatica en goed thuis zijn op zoveel mogelijk van deze terreinen: (Embedded) Software Engineering, kennis van OO-programmeertalen bijvoorbeeld Java, C#, C++, UML voor analyse en ontwerp van systemen en embedded media objects. U hebt visie en een verfrissende kijk op uw vakgebied. U bent creatief en ondernemend en hebt uitstekende didactische, sociale en communicatieve vaardigheden. Omdat van hogeschooldocenten tevens verwacht wordt dat zij onderzoek verrichten, is affiniteit met en/of ervaring in het uitvoeren van onderzoek een pre.